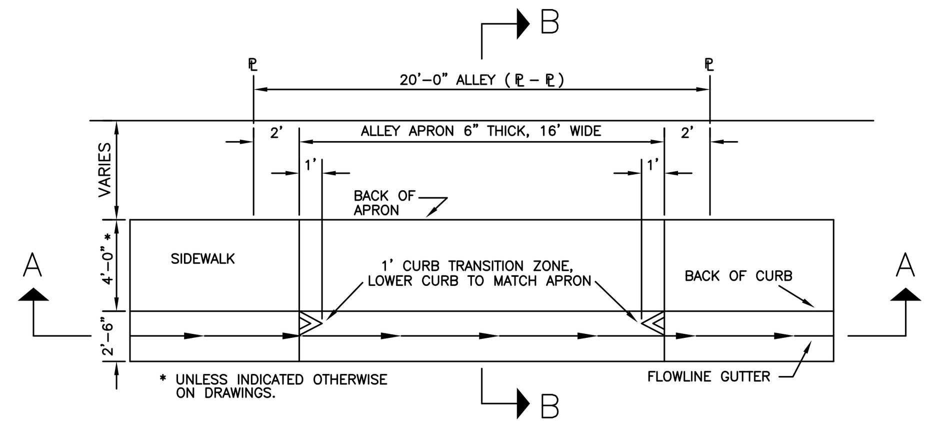

PLAN

PLAN

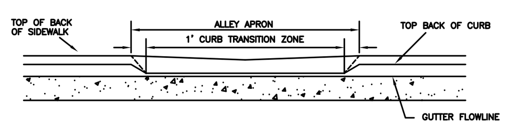

SECTION A–A

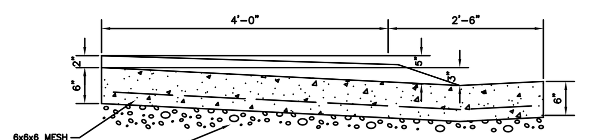

SECTION B–B

ALLEY APRON DETAILS

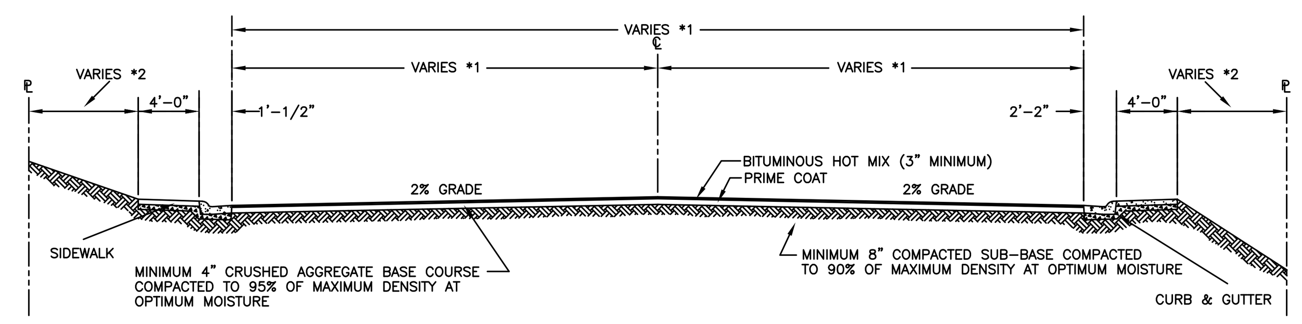

TYPICAL HOT MIX SECTION

*1 STREET WIDTH VARIES ACCORDING TO STREET CLASSIFICATION, SEE CITY OF CODY MASTER STREET PLAN.

*2 DISTANCE FROM PROPERTY LINE (℞) TO BACK OF SIDEWALK VARIES DEPENDING UPON THE WIDTH OF THE AVAILABLE RIGHT-OF-WAY AND THE STREET CLASSIFICATION, SEE CITY OF CODY MASTER STREET PLAN.

SPECIAL NOTE

THE ABOVE SHOWN TYPICAL STREET SECTIONS ARE TO BE CONSIDERED MINIMUM STANDARDS. ALL STREETS WILL BE DESIGNED IN ACCORDANCE WITH ACCEPTED ENGINEERING DESIGN PROCEDURES WITH SAID DESIGN BEING APPROVED BY THE CITY ENGINEER.

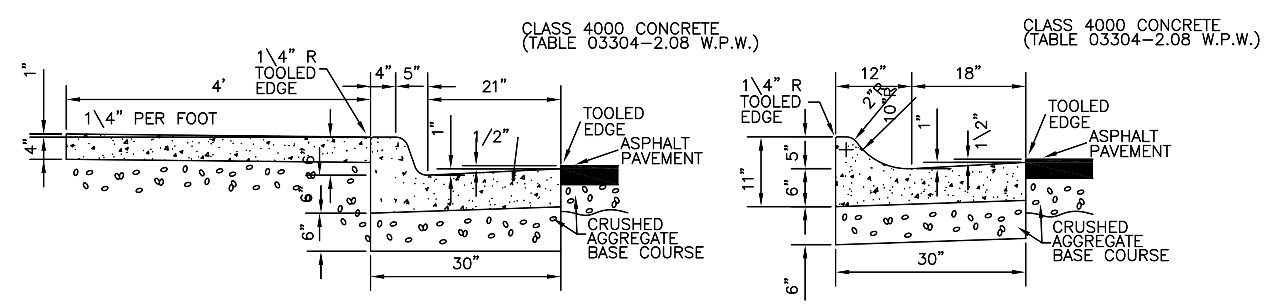

NOTE: 1. SUBGRADE COMPACTION SHALL CONFORM TO 2001 WYOMING PUBLIC WORKS STANDARD SPECIFICATIONS SECTION 02231
2. 1/2" EXPANSION JOINT MATERIAL SHALL BE PLACED AT P.C., P.T., AND CURB TURNS. CONTRACTION JOINTS SHALL COMPLY WITH 2001 WYOMING PUBLIC WORKS STANDARD
3.* SPECIFICATIONS SECTION 02520
4. NO CURB AND GUTTER SHALL BE PLACED WITHOUT A FINAL FORM INSPECTION BY THE ENGINEER.
5. CLASS A (TABLE 03304-2.08 W.P.W.) CONCRETE SHALL BE USED.

*CONTRACTION JOINTS SHALL BE CONSTRUCTED BY SAWING OR SCORING. WHEN SCORING, A TOOL SHALL BE USED WHICH WILL LEAVE CORNERS ROUNDED AND DESTROY AGGREGATE INTERLOCK FOR SPECIFIED MINIMUM DEPTH.

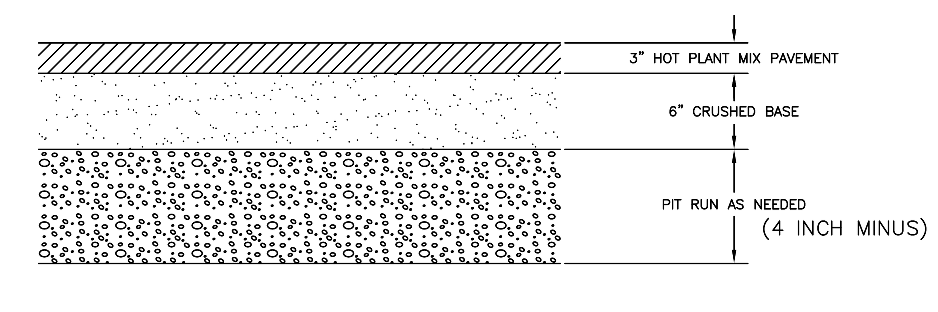

PAVEMENT SECTION
PERMANENT RESURFACING FOR UTILITY CUTS

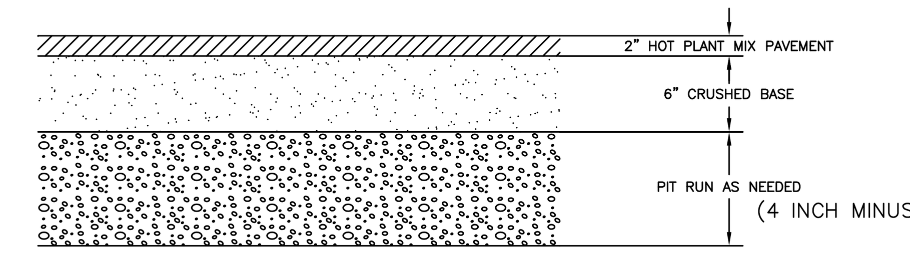

PAVEMENT SECTION
TEMPORARY RESURFACING FOR UTILITY CUTS

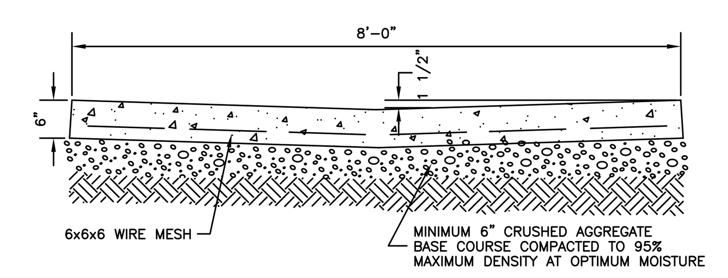

NOTE: FIBER REINFORCED CONCRETE OR #3 BARS @ 12" OC EACH WAY MAY BE SUBSTITUTED FOR WELDED WIRE FABRIC UPON WRITTEN APPROVAL OF ENGINEER.

TYPICAL VALLEY
GUTTER SECTION

CODY MATERIAL SPECIFICATIONS

1. ALL SUBBASES AND BASE COURSES SHALL BE COMPACTED TO 95% OF MAXIMUM DENSITY AT OPTIMUM MOISTURE AS DETERMINED IN ACCORDANCE WITH AASHTO 180.
2. CRUSHED BASE COURSE
   A. THE MATERIAL PRODUCED SHALL BE UNIFORMLY GRADED COARSE TO FINE AND SHALL NOT VARY FROM THE HIGH LIMIT ON ONE SIEVE TO THE LOW LIMIT ON AN ADJACENT SIEVE OR VICE VERSA.
   B. THE PERCENTAGE PASSING THE NO. 200 SIEVE SHALL NOT EXCEED ONE HALF OF THE PERCENTAGE PASSING THE NO. 40 SIEVE.
   C. THE MATERIAL PASSING THE NO. 40 SIEVE SHALL HAVE A LIQUID LIMIT NOT GREATER THAN 25 AND A PLASTICITY INDEX NOT GREATER THAN 6, EXCEPT WHEN THE PLASTICITY INDEX IS 0 (ZERO), THE LIQUID LIMIT SHALL NOT EXCEED 30.
   D. ALL CRUSHED BASE COURSE MATERIAL SHALL MEET THE FOLLOWING GRADATION WHEN TESTED IN ACCORDANCE WITH AASHTO T-27 & T-11:

SIEVE	% PASSING
1"	100
3/4"	90–100
1/2"	60–85
No. 4	45–65
No. 8	33–53
No. 200	3–12

3. AGGREGATE FOR HOT PLANT PAVEMENT MIX : IN ACCORDANCE WITH WYOMING TRANSPORTATION DEPARTMENT STANDARD SPECIFICATIONS–LATEST EDITION.
   A. FOR COMPACTED THICKNESSES 3" OR LESS, USE WYDOT 1/2–INCH MAXIMUM AGGREGATE.
   B. FOR COMPACTED THICKNESSES GREATER THAN 3", USE WYDOT 3/4–INCH MAXIMUM AGGREGATE FOR FIRST LIFT. SECOND LIFT SHALL BE A MINIMUM COMPACTED THICKNESS OF 1–1/2 INCHES, 1/2–INCH MAXIMUM AGGREGATE.
   C. MINERAL FILLER: FINELY GROUND PARTICLES OF LIMESTONE, HYDRATED LIME OR OTHER MINERAL DUST, FREE OF FOREIGN MATTER.
4. PRIMER: A CUT–BACK LIQUID ASPHALT OF THE MEDIUM CURING TYPE, GRADE ,C–70, AND SHALL COMPLY WITH THE REQUIREMENTS OF ASTM D2027. BITUMINOUS HOT MIX PAVEMENT SHALL BE APPROVED BY THE CITY ENGINEER BEFORE ANY WORK MAY.
5. TACK COAT: A CATIONIC SLOW SET EMULSIFIED ASPHALT MIXED WITH A N EQUAL AMOUNT OF WATER, GRADE CSS–1H, AND SHALL COMPLY WITH THE REQUIREMENTS OF ASTM D244. OTHER GRADES OF EMULSIFIED ASPHALT WILL BE CONSIDERED TESTING OR EXPERIENCE THAT ANOTHER GRADE IS MORE SUITABLE.
6. MIX DESIGN: A COMPLETE MIX DESIGN MEETING THE REQUIREMENTS OF AI MS–2 COMPLETED WITHIN THE LAST 24 MONTHS FOR THE SPECIFIC MATERIALS TO BE USED SHALL BE SUBMITTED FOR APPROVAL PRIOR TO BEGINNING WORK.

   AI MS–2 ESTABLISHES THE FOLLOWING REQUIREMENTS FOR THE ASPHALT CEMENT CONCRETE FOR A MEDIUM TRAFFIC VOLUME:

STABILITY (LB, MINIMUM)	1200
FLOW, (0.01 IN.)	8 TO 16
PERCENT AIR VOIDS (%)	3 TO 5
VOIDS IN MINERAL AGGREGATE (%, MINIMUM)	15

7. CONCRETE SPECIFICATIONS
   A. CEMENT SHALL BE PORTLAND CEMENT, TYPE II CONFORMING TO THE REQUIREMENTS OF ASTM C–150 (IF SPECIAL CONDITIONS WARRANT IT, THE USE OF A DIFFERENT TYPE OF CEMENT MAY BE APPROVED BY THE CITY ENGINEER).
   B. AGGREGATE GENERAL – GRAVEL, CRUSHED SLAG, CRUSHED STONE, OR OTHER INERT MATERIALS, COMPOSED OF HARD, STRONG, DURABLE PARTICLES FREE OF INJURIOUS COATINGS.
   C. FINE AGGREGATE
      1) THE MAXIMUM PERCENTAGE OF DELETERIOUS SUBSTANCES SHALL NOT EXCEED THE FOLLOWING PERCENTAGES BY WEIGHT:

COAL AND LIGNITE	.3%
CLAY LUMPS	.5%
OTHER DELETERIOUS SUBSTANCES	2.0%

      2) WHEN TESTED IN ACCORDANCE WITH THE LOS ANGELES RATTLER METHOD, THE COARSE AGGREGATE SHALL NOT SHOW A WEAR IN EXCESS OF 40%.
      3) THE FINE AGGREGATE SHALL BE FREE FROM INJURIOUS AMOUNTS OF ORGANIC IMPURITIES.
   D. COARSE AGGREGATE
      1) THE MAXIMUM PERCENTAGES OF DELETERIOUS SUBSTANCES SHALL NOT EXCEED THE FOLLOWING PERCENTAGES BY WEIGHT:

SOFT FRAGMENTS:	1%
COAL AND LIGNITE	0.3%
CLAY LUMPS	0.3%
OTHER DELETERIOUS SUBSTANCES	2.0%

      2) THE COARSE AGGREGATE SHALL BE GRADED COARSE TO FINE MEETING THE FOLLOWING GRADATION:

SIEVE	% PASSING
3/8"	100
No. 4	95–100
No. 16	45–80
No. 50	10–30
No. 100	2–10
No. 200	0–4

      3) THE AGGREGATE SHALL BE GRADED COARSE TO FINE MEETING THE FOLLOWING GRADATION:

SIEVE	% PASSING	
1 1/2"	100	
1"	95–100	
1/2"	25–60	
No. 4	0–10	
No. 8	0–5	2860 P.S.I.
No. 200	0–2	4000 P.S.I.

   E. ADMIXTURES AND AIR–ENTRAINING AGENTS SHALL BE APPROVED BY THE ENGINEER AS RECOMMENDED WITHIN THE REQUIRED MIX DESIGN AS PREPARED BY A QUALIFIED TESTING LABORATORY.
   F. ALL CONCRETE PLACED SHALL HAVE A SLUMP OF BETWEEN 1" AND 4" WHEN TESTED IN ACCORDANCE WITH AASHTO T–119.
   G. ALL CONCRETE PLACED SHALL MEET THE FOLLOWING MINIMUM STRENGTH REQUIREMENTS WHEN TESTED IN ACCORDANCE WITH ALL APPLICABLE ASTM STANDARDS:
      LABORATORY MIXED SAMPLE 7 DAYS
      28 DAYS
8. GENERAL – ALL WORK ASSOCIATED WITH THE DETAILS SHOWN ON THIS PAGE SHALL BE ACCOMPLISHED IN ACCORDANCE WITH THE WYOMING PUBLIC WORKS STANDARD SPECIFICATIONS, UNLESS OTHER SPECIFICATIONS ARE PROVIDED IN THE PROJECT MANUAL.

NOTE: ALL DETAILS NOT TO SCALE

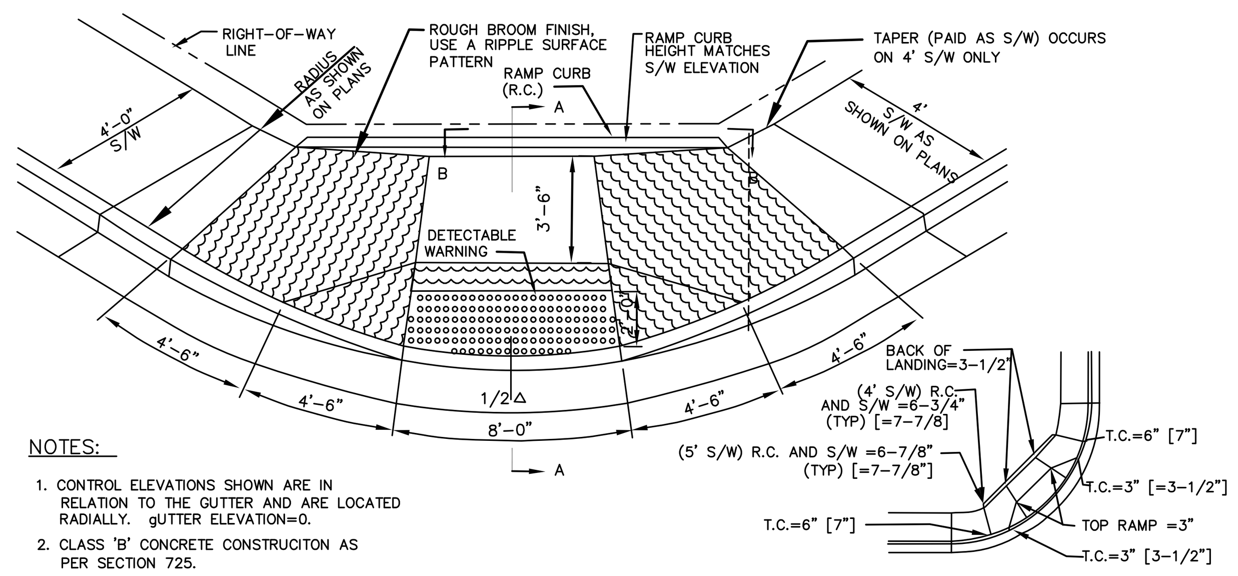

CONTROL ELEVATIONS
SEE NOTES 1 AND 3

NOTES:

1. CONTROL ELEVATIONS SHOWN ARE IN RELATION TO THE GUTTER AND ARE LOCATED RADIALLY. gUTTER ELEVATION=0.
2. CLASS 'B' CONCRETE CONSTRUCITON AS PER SECTION 725.
3. WHEN CURB HEIGHTS OF 7" ARE SHOWN ON PLANS, USE DIMENSIONS SHOWN IN [ ]'S.
4. DETECTABLE WARNINGIS TO COMPLY WITH JURDISDICTIONAL AGENCY'S REQUIREMETNS.

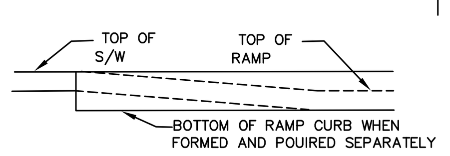

SECTION B–B

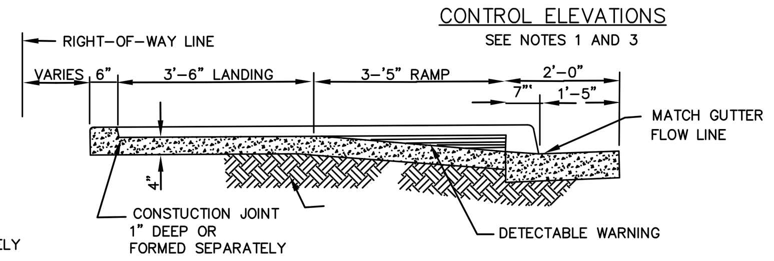

SECTION A–A

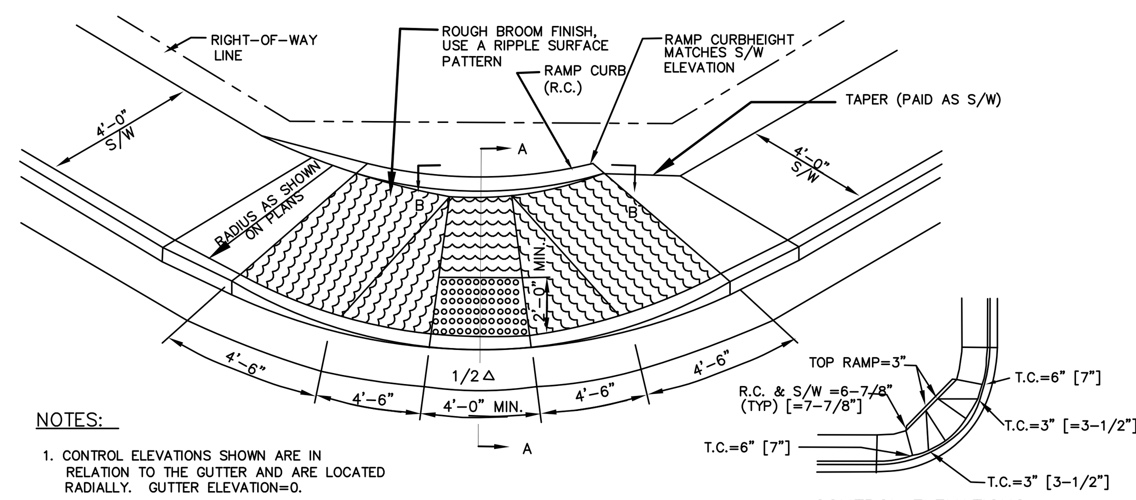

CONTROL ELEVATIONS
SEE NOTES 1 AND 3

NOTES:

1. CONTROL ELEVATIONS SHOWN ARE IN RELATION TO THE GUTTER AND ARE LOCATED RADIALLY. GUTTER ELEVATION=0.
2. CLASS 'B' CONCRETE CONSTRUCITON AS PER SECTION 725.
3. WHEN CURB HEIGHTS OF 7" ARE SHOWN ON PLANS, USE DIMENSIONS SHOWN IN [ ]'S.
4. DETECTABLE WARNINGIS TO COMPLY WITH JURDISDICTIONAL AGENCY'S REQUIREMETNS.
5. OFFSET RADIUS IS SUFFICIENT NO CUTTING OR TRIMMING IS REQUIRED.

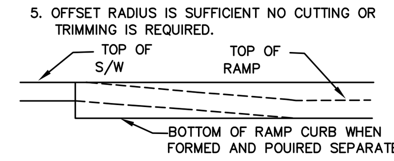

SECTION B–B

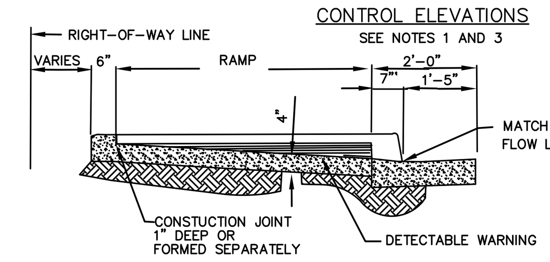

SECTION A–A

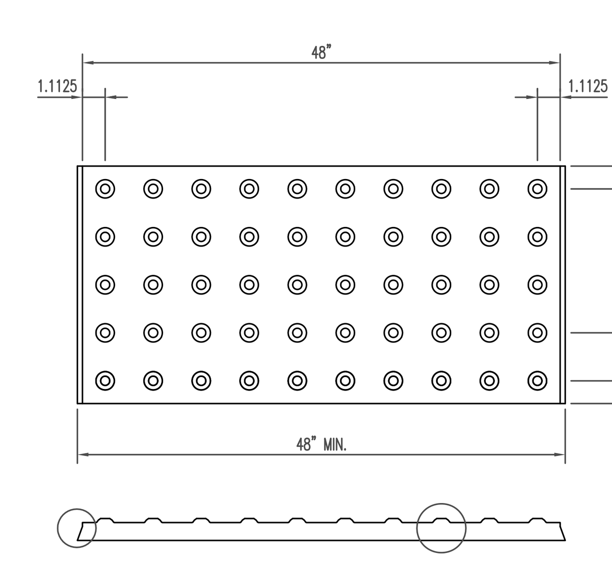

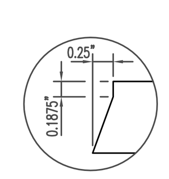

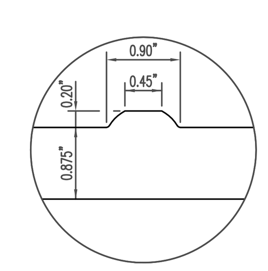

GENERAL NOTES

1. PLACE TRUNCATED DOME DETECTABLE WARNING PANELS AT THE BASE OF CURB RAMP. INSTALL ACROSS FULL WIDTH OF RAMP A MINIMUM 610mm (24") IN DEPTH AND SET BACK 200mm (8") FROM BOTTOM OF CURB.
2. SIDEWALK CURB RAMP SLOPES SHOWN ARE RELATIVE TO THE TRUE LEVEL HORIZON (ZERO BUBBLE).
3. IN ALTERATIONS CURB RAMP SLOPE(S) MAY BE 10% FOR A MAXIMUM RISE OF 150mm (6") OR 12.5% FOR MAXIMUM RISE OF 75mm (3"). CURB RAMPS, IN ALTERATIONS, NEED NOT EXCEED 1.8m (6'–0") IN LENGTH.
4. SIDE FLARES THAT ARE NOT PART OF THE PATH OF TRAVEL MAY BE ANY SLOPE.
5. FOR THE PURPOSES OF THIS DRAWING, A CURB RAMP IS CONSIDERED "PERPENDICULAR" IF THE ANGLE BETWEEN THE LONGITUDINAL AXIS OF THE RAMP AND A TANGENT TO THE CURB AT THE RAMP CENTER IS 75 DEGREES OR GREATER.
6. TOOLED JOINTS ARE REQUIRED AT ALL SIDEWALK RAMP SLOPE BREAKS.
7. SIDEWALK FLARE IN NOT NECESSARY WHERE THE RAMP IS PROTECED FROM PEDESTRIAN CROSS–TRAVEL.
8. THICKEN CONRETE UNDER DETECTABLE WARNING PANEL.
9. IN FREEZE THAW ZONES, LEAVE 3/16" GAP IN BETWEEN PANELS AND SEAL WITH SIKAFLEX 1A SEALANT.

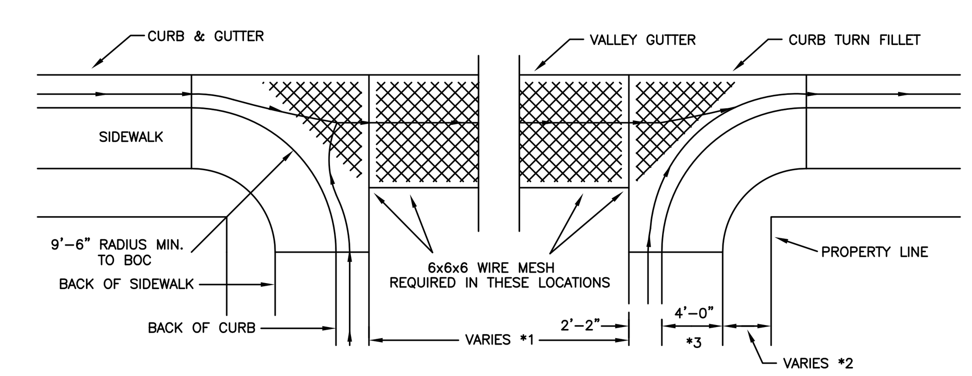

TYPICAL STREET CORNER DETAIL: CURB
TURN FILLET, SIDEWALK & VALLEY GUTTER

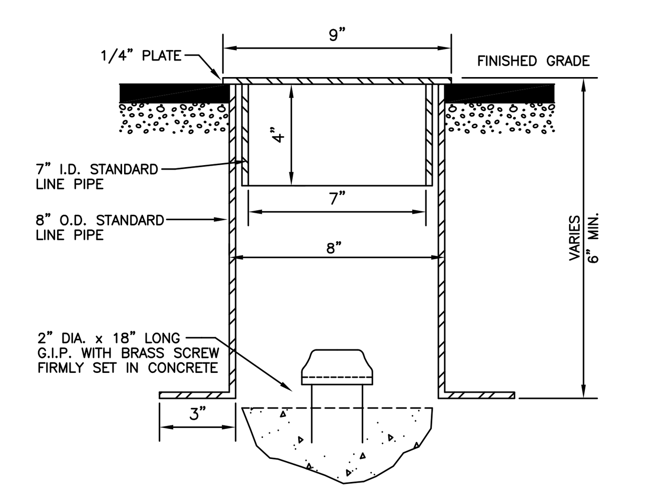

SURVEY CONTROL MONUMENT WITH BOX

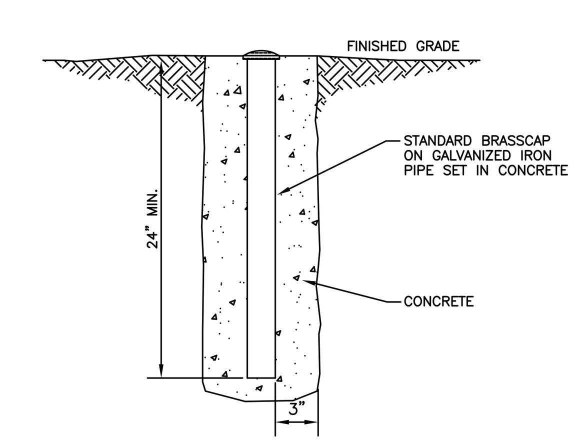

STANDARD BRASSCAP

CALL 1–800–849–2476
48 HOURS BEFORE YOU DIG

CITY OF CODY
WYOMING

DRAWN BY: ULD
CHECKED BY: SWP
JOB NAME: STREET STANDARD DETAIL
FILE NAME: H:\ENGINEERING\AUTOCAD~\DETAILS
DATE: 7/06/2015

NO	REVISION	DATE	BY
1	CHANGE GRADATIONS	9/16/98	HMC
2	TYPO CORRECTIONS	10/8/98	HMC
3	TYPO CORRECTIONS	11/7/00	ULD
4	TYPO CORRECTIONS	4/24/02	ULD
5	ADDED ANOTHER DIMENSION	8/18/03	ULD
6	TYPO CORRECTION	8/28/03	ULD
7	ADA SIDEWALK REGS.	2/3/04	ULD
8	REVISED THE CODY MATERIALS SPECIFICATIONS	8/26/04	ULD
9	REVISED HANDICAP RAMPS	3/30/06	ULD
10	MADE REVISION TO SPECIFICATIONS	7/25/07	ULD
11	MADE REVISION TO HANDICAP RAMPS	7/06/15	ULD

STANDARD STREET DETAIL SHEET

SHEET 4 OF 4